NEXIVO
by KGP Electronics GmbH

SC42W300-1050CG4-X-DIM-NX

Constant Current Driver

Model:SC42W300-1050CG4-X-DIM-NX

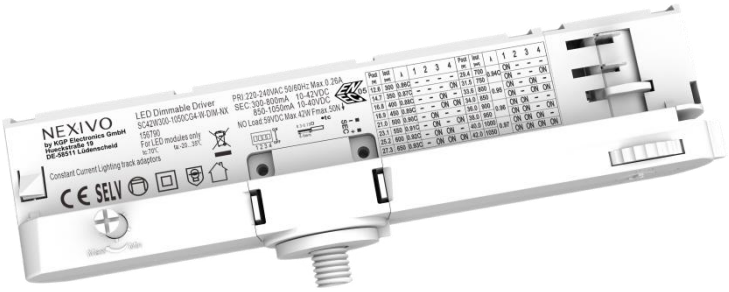

Model	Item Code	Output current	Output power range	PF	Efficiency (*Typical)	Output voltage	No load voltage
SC42W300-1050CG4-W-DIM-NX SC42W300-1050CG4-B-DIM-NX SC42W300-1050CG4-G-DIM-NX	156790 156800 156810	300mA	3.00-12.60W	0.97	87%	10-42V	59V
		350mA	3.50-14.70W	0.98	87%		
		400mA	4.00-16.80W	0.98	88%		
		450mA	4.50-18.90W	0.98	88%		
		500mA	5.00-21.00W	0.98	88%		
		550mA	5.50-23.10W	0.99	88%		
		600mA	6.00-25.20W	0.99	89%		
		650mA	6.50-27.30W	0.99	89%		
		700mA	7.00-29.40W	0.99	89%		
		750mA	7.50-31.50W	0.99	90%		
		800mA	8.00-33.60W	0.99	90%		
		850mA	8.50-34.00W	0.99	90%	10-40V	
		900mA	9.00-36.00W	0.99	90%		
		950mA	9.50-38.00W	0.99	89%		
		1000mA	10.00-40.00W	0.99	89%		
		1050mA	10.50-42.00W	0.99	89%		

*** Test result @230V, 50Hz, Full Load.**

1. Parameters

Category	Item	Technical Norm
Features	Output Type	Constant Current
	Output Features	Isolation
	IP Grade	IP20
	Insulation Class	Class II
	Dimming Type	Resistance knob dimmer
Input	Rated Input Voltage	220-240VAC
	Range of Input Voltage	176-264VAC or 176-280VDC
	Frequency	50/60Hz

KGP Electronics GmbH
Hueckstraße 19
DE-58511Lüdenscheid

	Input Current	≤0.25A
	Input Power	≤47.85W
	Power Factor	≥0.97 (230VAC,full load)
	THD	≤10% (230VAC,full load)
	No-load Power Consumption	≤0.5W @230VAC
Output	Output Voltage Range	10-42VDC@300-800mA 10-40VDC@850-1050mA
	No Load Voltage	59VDC Max.
	Output Current	300mA -1050mA
	Max. Output Power	42W
	Efficiency	≥90% (600mA-900mA)
	Current Ripple	±5% (Imax-Imin)/(Imax+Imin)
	Current Accuracy	±5%
	PSTLM	≤ 1
	SVM	≤0.4
Protection	Short Circuit Protection	Auto Recovery
	Overload Protection	Auto Recovery
	No-load Protection	Auto Recovery
	Insulation voltage	3000V 5mA 60S between P-S
	Insulation resistance	>100M ohm @ 500VDC
	Leakage current	< 250μA, I/P to O/P or I/P to PE @230V input
Environment	Ta/Operation Temperature	-20 … +35℃
	Ts/Storage Temperature	-25 … .+75℃
	Tc/Enclosure Temperature	70℃
	Humidity	10%.... 90%RH
	Atmosphere	86-108KPa
Construction	Connection Method	Push-in Terminal
	Installation	Independent
	SEC Wire preparation	0.3-0.75mm²
	Dimension	178.5 x 31 x 42.1mm (L*W*H)
Standards	Certification	CE/ENEC
	Safety Standards	EN 61347-1:2015/A1:2021, EN 61347-2-13:2014/A1:2017,EN 62493:2015
	EMC Standards	EN IEC 55015:2019,EN IEC 55015:2019/A11:2020, EN 61547:2009,EN IEC 61000-3-2:2019, EN 61547:2009,EN IEC 61000-3-3:2013/A1:2019
	Performance	EN 62384:2006/A1:2009
	Surge	L-N/2KV
Others	RoHS	Complied to 2011/65/EU
	Life Time	50000h @ Tc
	Warranty	5years ， F.R. < 10000ppm

Remark:
1.All Parameters, if not specified, are measured at 230VAC/50Hz and 25℃ ambient temperature.
2.LED Driver is a component of the luminaires, Luminaires and wire layout will affect the EMC, please check the EMC with end products again.

KGP Electronics GmbH
Hueckstraße 19
DE-58511Lüdenscheid

2. Output Current Setting

Output Current	1	2	3	4
300mA	-	-	-	-
350mA	-	-	-	ON
400mA	-	-	ON	-
450mA	-	-	ON	ON
500mA	-	ON	-	-
550mA	-	ON	-	ON
600mA	-	ON	ON	-
650mA	-	ON	ON	ON
700mA	ON	-	-	-
750mA	ON	-	-	ON
800mA	ON	-	ON	-
850mA	ON	-	ON	ON
900mA	ON	ON	-	-
950mA	ON	ON	-	ON
1000mA	ON	ON	ON	-
1050mA	ON	ON	ON	ON

3. Connected quantities of different current Breaker

TYPE	Connected quantities of different current Breaker						Input Voltage	Inrush Current (A)	Time
	current (A)	10	13	16	20	25			
	Installation wire diameter	1.5mm²	2.5mm²	2.5mm²	4mm²	4mm²			
TYPE B		33	43	53	67	83	@230VAC	18	2.8
TYPE C		53	69	85	107	133			
TYPE D		85	111	137	171	213			

4. Label

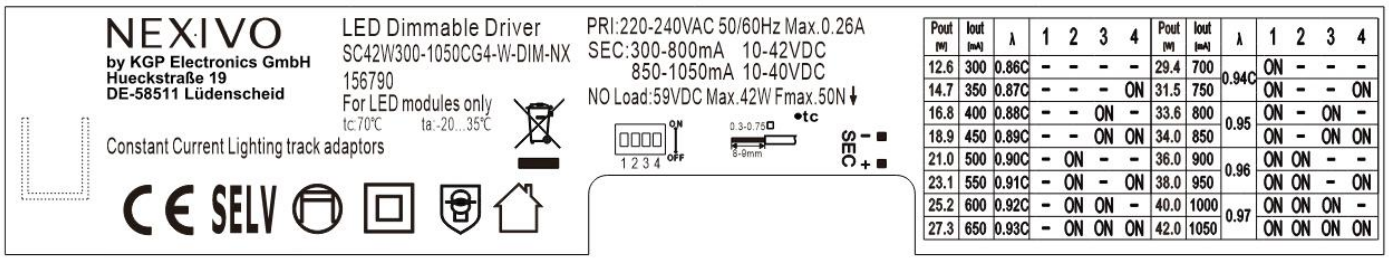

Pout (W)	Iout (mA)	λ	1	2	3	4	Pout (W)	Iout (mA)	λ	1	2	3	4
12.6	300	0.86C	-	-	-	-	29.4	700	0.94C	ON	-	-	-
14.7	350	0.87C	-	-	-	ON	31.5	750		ON	-	-	ON
16.8	400	0.88C	-	-	ON	-	33.6	800	0.95	ON	-	ON	-
18.9	450	0.89C	-	-	ON	ON	34.0	850		ON	-	ON	ON
21.0	500	0.90C	-	ON	-	-	36.0	900	0.96	ON	ON	-	-
23.1	550	0.91C	-	ON	-	ON	38.0	950		ON	ON	-	ON
25.2	600	0.92C	-	ON	ON	-	40.0	1000	0.97	ON	ON	ON	-
27.3	650	0.93C	-	ON	ON	ON	42.0	1050		ON	ON	ON	ON

5. Electrical values

Lifetime vs. Case Temperature	PF vs. Load
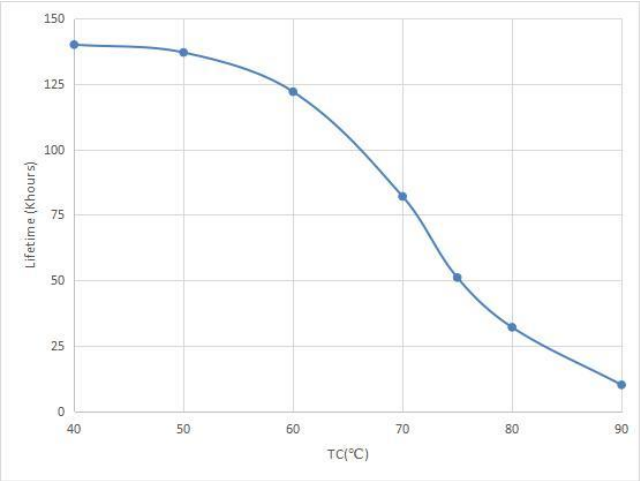	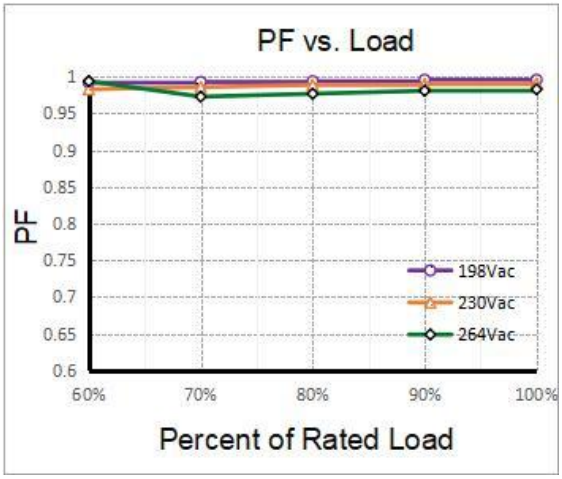
THD vs. Load	Efficiency vs. Load
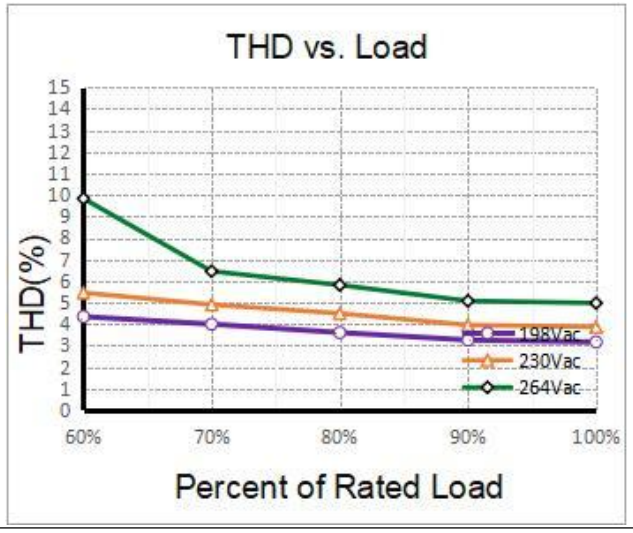	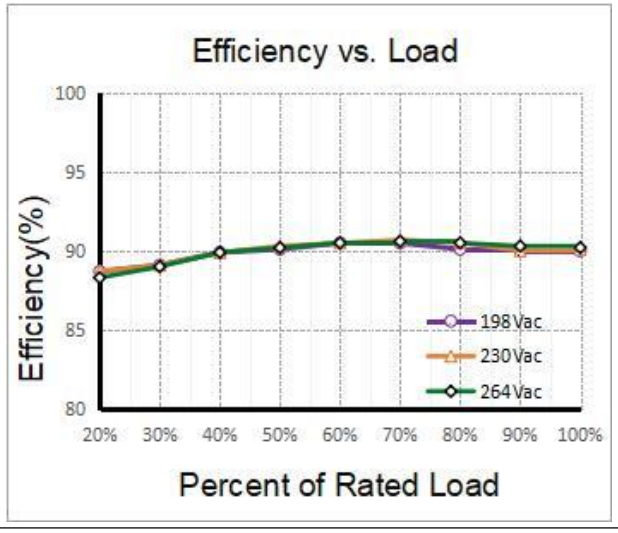

6. Dimension

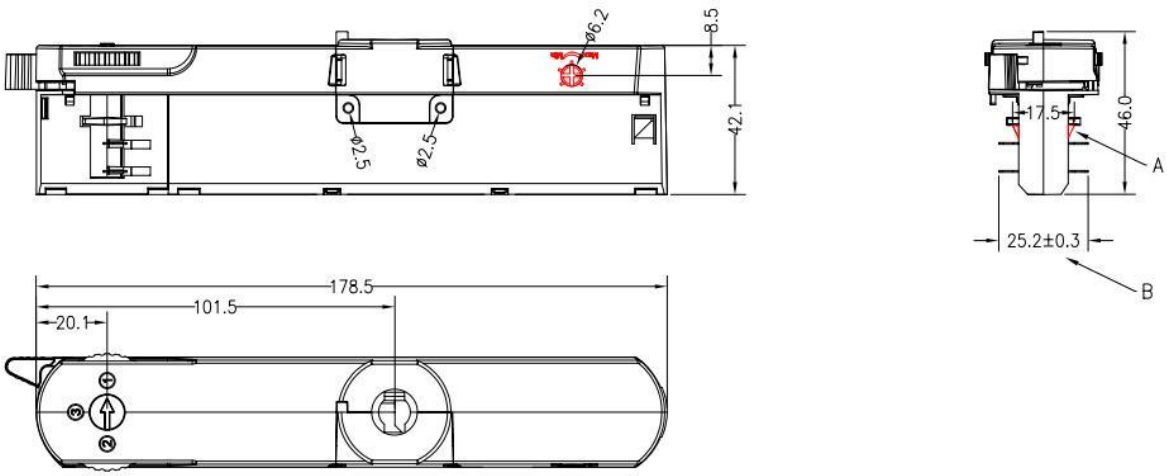

KGP Electronics GmbH
Hueckstraße 19
DE-58511Lüdenscheid

7. Wiring Diagram

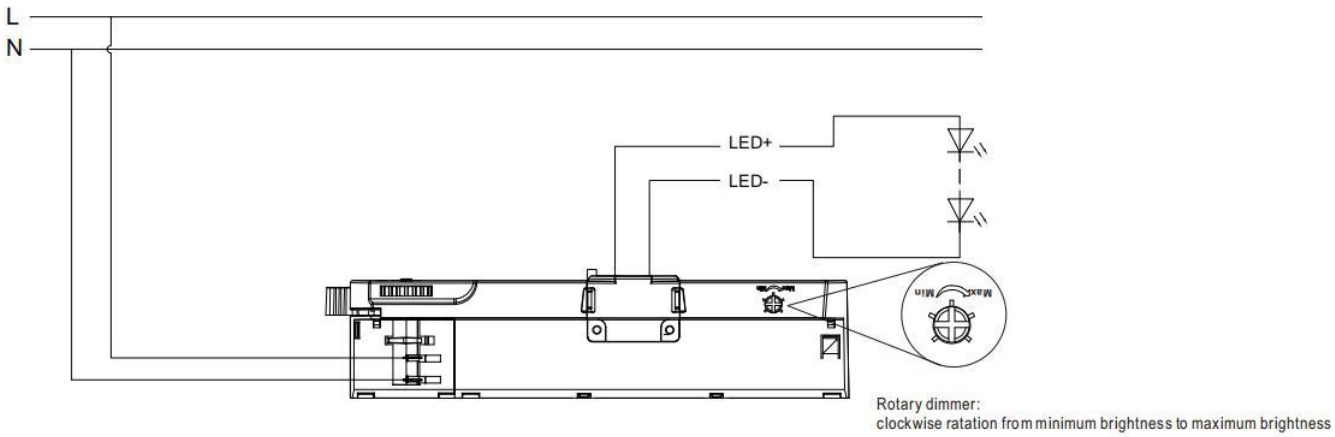

8. Packing information

Packing way	Model	Color	Carton L*W*H(mm)	Pcs/ Carton	Net weight/ Pcs(kg)	Net weight/ Carton(kg)	Gross weight / Carton(kg)
Industrial	SC42W300-1050CG4-W-DIM-NX	White	410*275*200	35	0.128	4.48	5.58
	SC42W300-1050CG4-B-DIM-NX	Black					
	SC42W300-1050CG4-G-DIM-NX	Grey					

9. Ordering data

Model No	Item code
SC42W300-1050CG4-W-DIM-NX	156790
SC42W300-1050CG4-B-DIM-NX	156800
SC42W300-1050CG4-G-DIM-NX	156810
NIP M10x1x8 B G2	142261
NIP M10x1x8 G G2	142271
NIP M10x1x8 W G2	142281
NIP M10x1x12 B G2	142211
NIP M10x1x12 G G2	142221
NIP M10x1x12 W G2	142231

KGP Electronics GmbH
Hueckstraße 19
DE-58511Lüdenscheid

10. Lamp Screw Type

- Optional threaded sleeve for luminaire mounting
- Suitable for M10x1x8 threaded nut
- Additional mounting equipment,e.g.M10x1x12
- Gray,black,white
- further on request

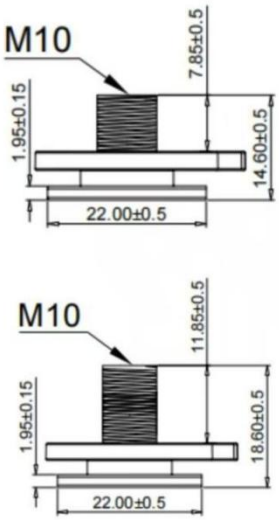

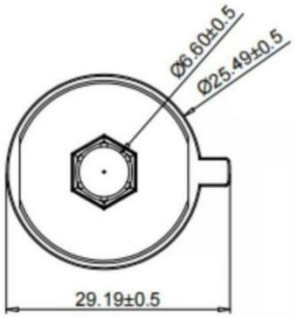

11. Suitable for following tracks

Serial number	Brand	Track model	System
1	Global	XTS11 & XTSC611	3P
2	A.A.G STUCCHL	9000A-2-ST	3P
3	Eutrac	25-106	3P
4	PowerGEAR	Pro-0431L&Pro-D631R	3P
5	ERCO	1079301000	3P

Remark:

1. The model name is XTS11 and XTSC611 tracks, and its brand is Global.
2. The model name used is the 9000A-2-ST track, and its brand is A.A.G STUCCHI.
3. The model name is 25-106 tracks, and its brand is Eutrac. The “x” in the model name represents: it represents a different color (x=1 white; x=2 black; x=3 silver, x=8 grey).
4. The model name is T32B tracks, and its brand is Unipro.
5. The model name is Pro-0431L&Pro-D631R 4 tracks, and its brand is PowerGEAR.

KGP does not guarantee the compatibility of the tracks and the track-adapter, because manufacturing tolerances of the tracks or changes made at the tracks by the manufacturer could affect the compatibility between the tracks and the adapter.

12. Phase track light rail specification:

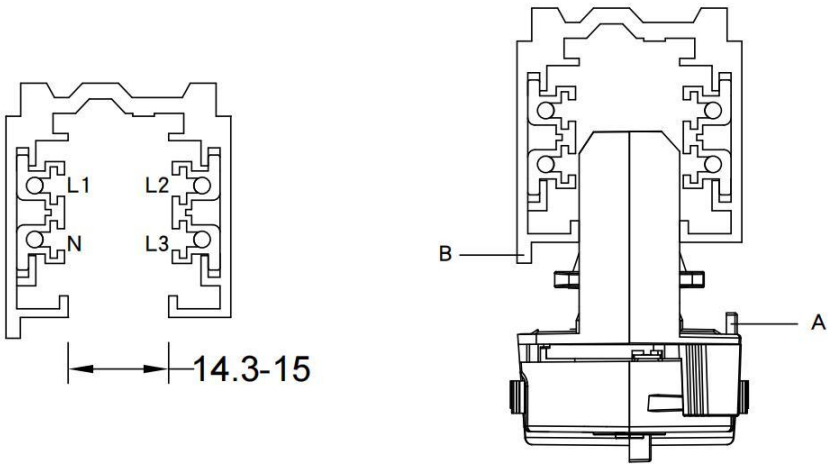

*Insert the adapter into the track, note the position of the mechanical key (A) and the mechanical key (B)

13. Lighting track adapter and rail system installation diagram:

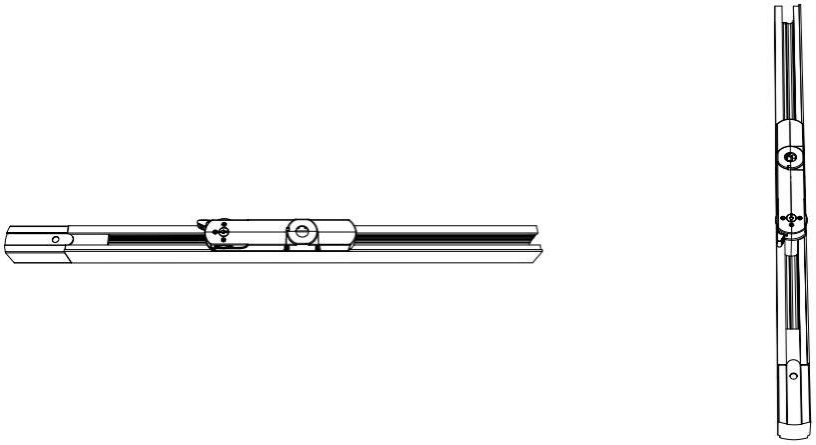

The adaptor shall be given that the use is limited to the track system specified.

14. Wiring instructions

- All connections must be kept as short as possible to ensure good EMI behaviour
- Mains leads should be kept apart from LED Driver and other leads (ideally 5 – 10 cm distance)
- Advice the maximum length of output wires is 3 m（EMI Out of the calculation）
- Secondary switching is not permitted（Except for constant voltage）
- Incorrect wiring can damage LED modules.
- The wiring must be protected against short circuits to earth (sharp edged metals parts, metal cable clips, louver, etc.)

15. Replace LED module

- Mains off
- Remove LED module
- Wait for 30 seconds
- Connect LED module again
- Hot plug-in or secondary switching of LEDs is not permitted and may cause a very high current to the LEDs

16. Revision history

Date	Revision	Remark
2026.16.03	V0.01	Product release

KGP Electronics GmbH
Hueckstraße 19
DE-58511Lüdenscheid