NEXIVO
by KGP Electronics GmbH

SC42W300-1050CG4-X-TRIAC-NX

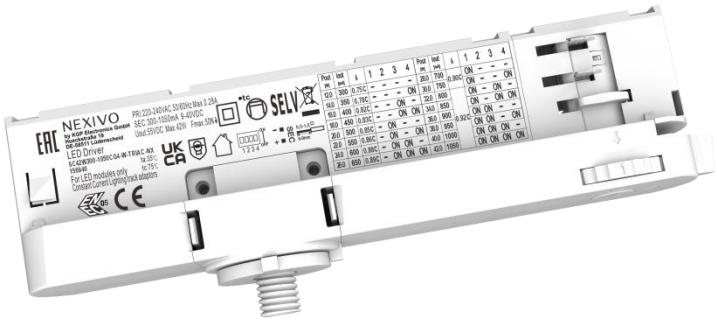

Constant Current Driver

Model:SC42W300-1050CG4-X-TRIAC-NX

Model	Item Code	Output current	Output power range	PF	Efficiency (*Typical)	Output voltage	No load voltage
SC42W300-1050CG4-W-TRIAC-NX SC42W300-1050CG4-B-TRIAC-NX SC42W300-1050CG4-G-TRIAC-NX	156940 156950 156960	300mA	2.70-12.00W	⩾0.75	⩾79%	9-40V	55V
		350mA	3.15-14.00W	⩾0.78	⩾81%		
		400mA	3.55-16.00W	⩾0.82	⩾82%		
		450mA	4.05-18.00W	⩾0.83	⩾83%		
		500mA	4.50-20.00W	⩾0.85	⩾84%		
		550mA	4.95-22.00W	⩾0.86	⩾85%		
		600mA	5.40-24.00W	⩾0.88	⩾85%		
		650mA	5.85-26.00W	⩾0.89	⩾86%		
		700mA	6.30-28.00W	⩾0.90	⩾86%		
		750mA	6.75-30.00W	⩾0.90	⩾86%		
		800mA	7.20-32.00W	⩾0.92	⩾86%		
		850mA	7.65-34.00W	⩾0.92	⩾87%		
		900mA	8.10-36.00W	⩾0.92	⩾87%		
		950mA	8.55-38.00W	⩾0.92	⩾87%		
		1000mA	9.00-40.00W	⩾0.92	⩾87%		
		1050mA	9.45-42.00W	⩾0.92	⩾87%		

*** Test result @230V, 50Hz, Full Load.**

1. Parameters

Category	Item	Technical Norm
Features	Output Type	Constant Current
	Dimming Type	Phase dimming
	Dimming Range	1%-100%
	Output Features	Isolation
	IP Grade	IP20
	Insulation Class	Class II
Input	Rated Input Voltage	220-240VAC
	Range of Input Voltage	198-264VAC or 180-280VDC

KGP Electronics GmbH
Hueckstraße 19
DE-58511Lüdenscheid

SC42W300-1050CG4-X-TRIAC-NX

	Frequency	50/60Hz
	Input Current	≤0.28A (230VAC, full load)
	Input Power	≤51W(230VAC, full load)
	Power Factor	≥0.92(230VAC, full load)
	THD	≤10% (230VAC, full load)
	No-load Power Consumption	≤1.55W @230VAC
Output	Output Voltage	9-40V(above list)
	Output Current:	300/350/400/450/500/550/600/650/700/750/800/850/ 900/9 50/1000/1050mA
	No Load Voltage	55VDC Max
	Max. Output Power:	46W
	LF Current Ripple (< 120 Hz)	±5% (Imax-Imin)/(Imax+Imin) MAX
	Efficiency	≥87%（230VAC,full load）
	Current Accuracy	300-450mA±8% 500-1050mA±5%
	Started Delay Time	≤2S （230VAC,full load）
	PstLM	≤1
	SVM	≤0.4
Protection	Short Circuit Protection	Auto Recovery
	Overload Protection	Auto Recovery
	No-load Protection	Auto Recovery
	Insulation voltage	3000V 5mA 60S between P-S
	Insulation resistance	>100M ohm @ 500VDC
	Leakage current	I/P to O/P <0.7mA
Environment	Ta/Operation Temperature	-20 … +35℃；
	Ts/Storage Temperature	-25 … .+85℃
	Tc/Enclosure Temperature	75℃
	Humidity	10%.... 90%RH
	Atmosphere	86-108KPa
Construction	Connection Method	Push-in Terminal
	Installation	Independent
	SEC Wire preparation	0.5-1.5□
	Dimension	158 x 31 x 45mm (L*W*H)
Standards	Certification	CE/ ENEC
	Safety Standards	EN 61347-1:2015/A1:2021 EN 61347-2-13:2014/A1:2017 EN IEC 62384:2020 EN 62493:2015/A1:2022
	EMC Standards	EN IEC 55015:2019 EN IEC 55015:2019/A11:2020 EN IEC 61000-3-2:2019/A1:2021 EN 61000-3-3:2013/A2:2021 EN IEC 61547:2023
	Performance	EN 62384:2006/A1:2009
	Surge	L-N/2KV

Others	RoHS	Complied to 2011/65/EU
	Life Time	50000h @ Tc
	Warranty	5years ， F.R. < 10000ppm
	Noise	<22dB @ 20cm distance, 15dB background

Remark:

1.All Parameters, if not specified, are measured at 230Vac/50Hz and 25℃ ambient temperature.

2.LED Driver is a component of the luminaires, Luminaires and wire layout will affect the EMC, please check the EMC with end products again.

2. Trailing Edge Dimmer list approved by KGP

Manufacturer	Model	Q'ty of parallel connection
Schneider	E8432EPD4	T.B.D
Eltako	DTD55L-230V-wg	T.B.D
EHMANN	LED-Dimmer T37-08	T.B.D
LTECH	E6P-TD1	T.B.D
EUCHIPS	WALLDIM106W	T.B.D

Leading &Trailing Edge Dimmer list only on request -/ or confirmed by KGP Electronics

3. Output Current Setting

Output Current	1	2	3	4
300mA	-	-	-	-
350mA	-	-	-	ON
400mA	-	-	ON	-
450mA	-	-	ON	ON
500mA	-	ON	-	-
550mA	-	ON	-	ON
600mA	-	ON	ON	-
650mA	-	ON	ON	ON
700mA	ON	-	-	-
750mA	ON	-	-	ON
800mA	ON	-	ON	-
850mA	ON	-	ON	ON
900mA	ON	ON	-	-
950mA	ON	ON	-	ON
1000mA	ON	ON	ON	-
1050mA	ON	ON	ON	ON

4. Connected quantities of different current Breaker

TYPE	Connected quantities of different current Breaker						Input Voltage	Inrush Current	Time
	current（A）	10	13	16	20	25			
	Installation wire diameter	1.5mm²	2.5mm²	2.5mm²	4mm²	4mm²			
TYPE B		13	16	20	25	31	@230VAC	48	50us
TYPE C		20	26	32	40	50			
TYPE D		32	42	51	64	80			

5. Label

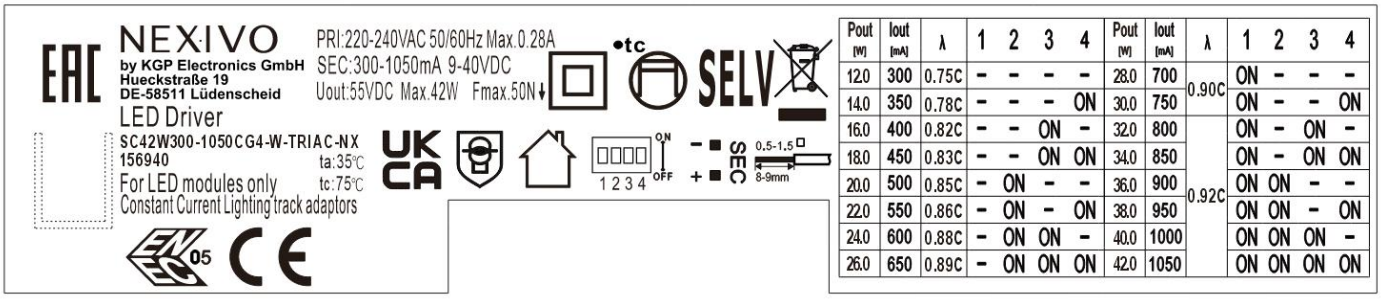

Pout [W]	Iout [mA]	λ	1	2	3	4	Pout [W]	Iout [mA]	λ	1	2	3	4
12.0	300	0.75C	-	-	-	-	28.0	700	0.90C	ON	-	-	-
14.0	350	0.78C	-	-	-	ON	30.0	750		ON	-	-	ON
16.0	400	0.82C	-	-	ON	-	32.0	800	0.92C	ON	-	ON	-
18.0	450	0.83C	-	-	ON	ON	34.0	850		ON	-	ON	ON
20.0	500	0.85C	-	ON	-	-	36.0	900		ON	ON	-	-
22.0	550	0.86C	-	ON	-	ON	38.0	950		ON	ON	-	ON
24.0	600	0.88C	-	ON	ON	-	40.0	1000		ON	ON	ON	-
26.0	650	0.89C	-	ON	ON	ON	42.0	1050		ON	ON	ON	ON

6. Dimming curve

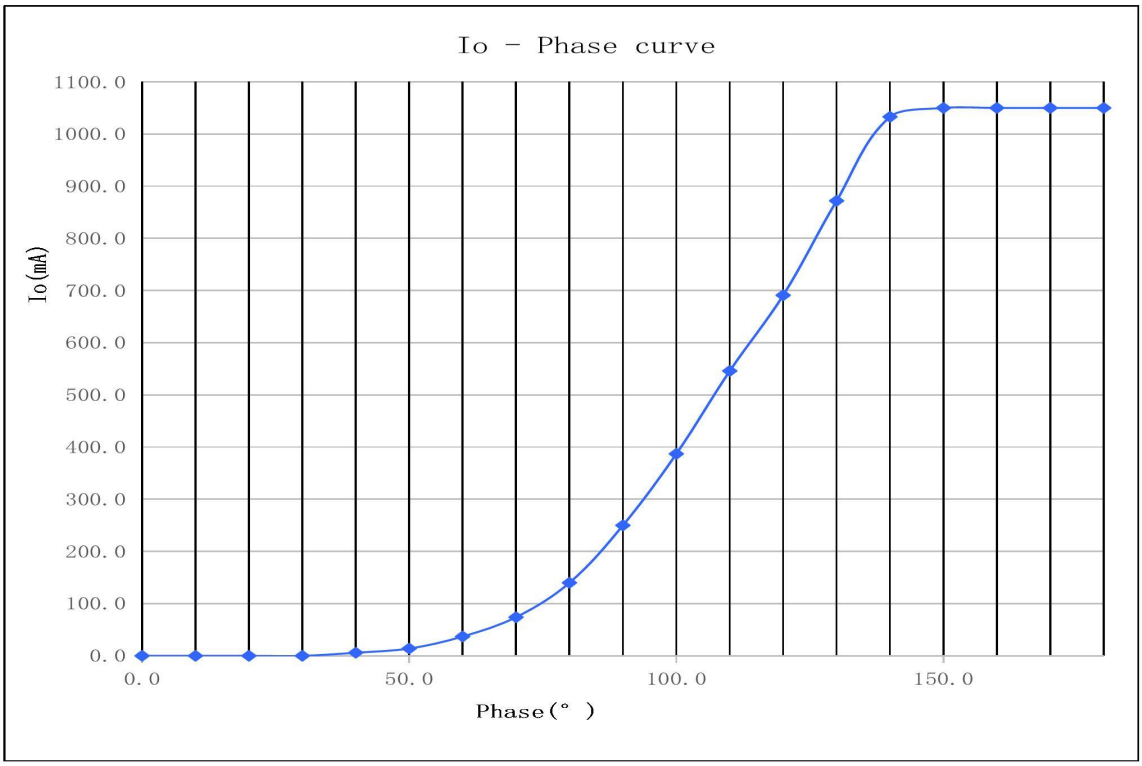

7. Electrical values

Lifetime vs. Case Temperature	PF vs. Load
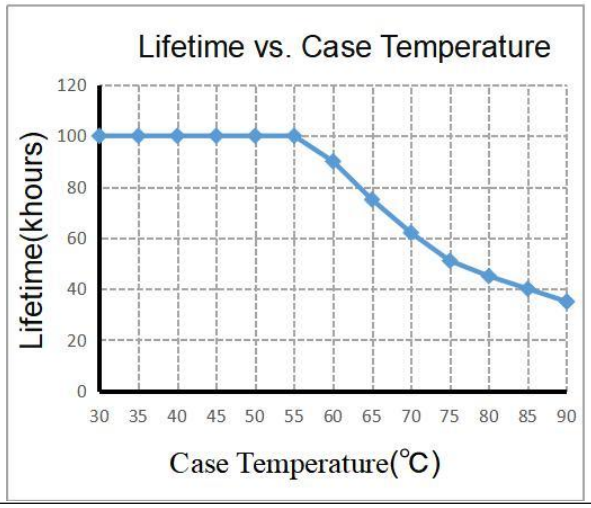	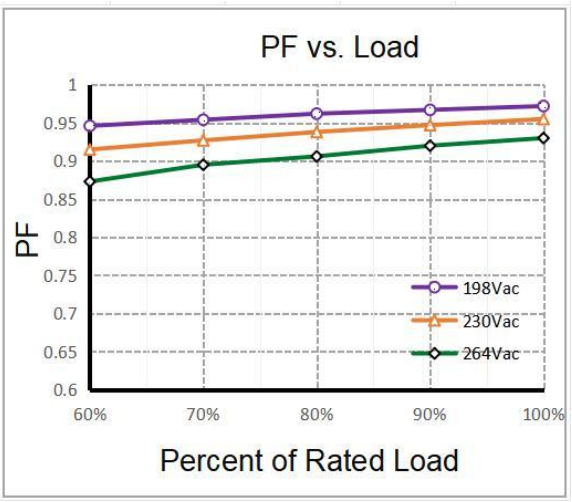
THD vs. Load	**Efficiency vs. Load**
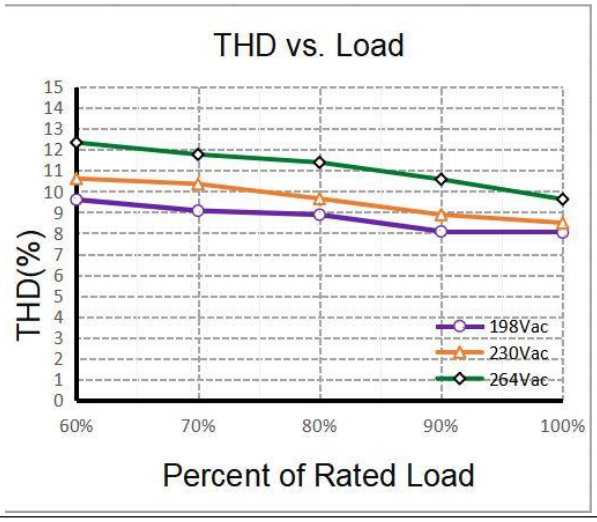	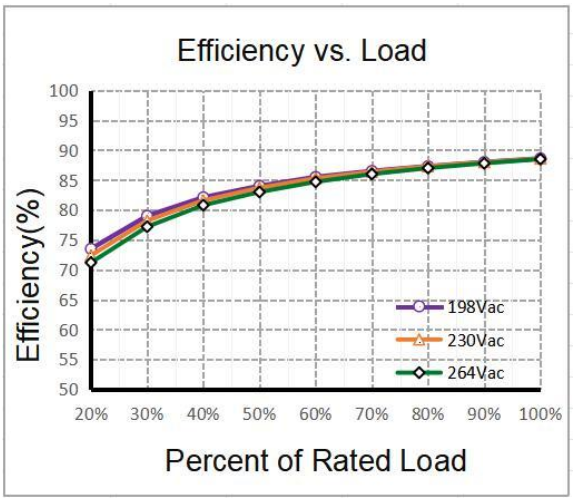

8. Dimension

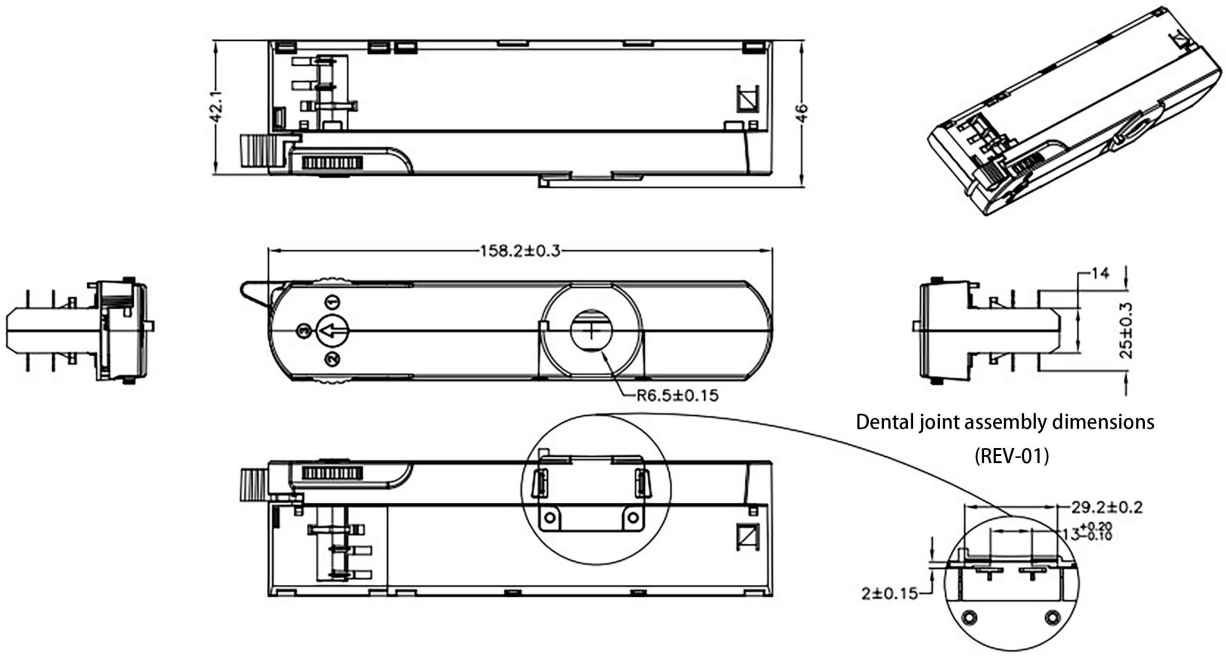

9. Wiring Diagram

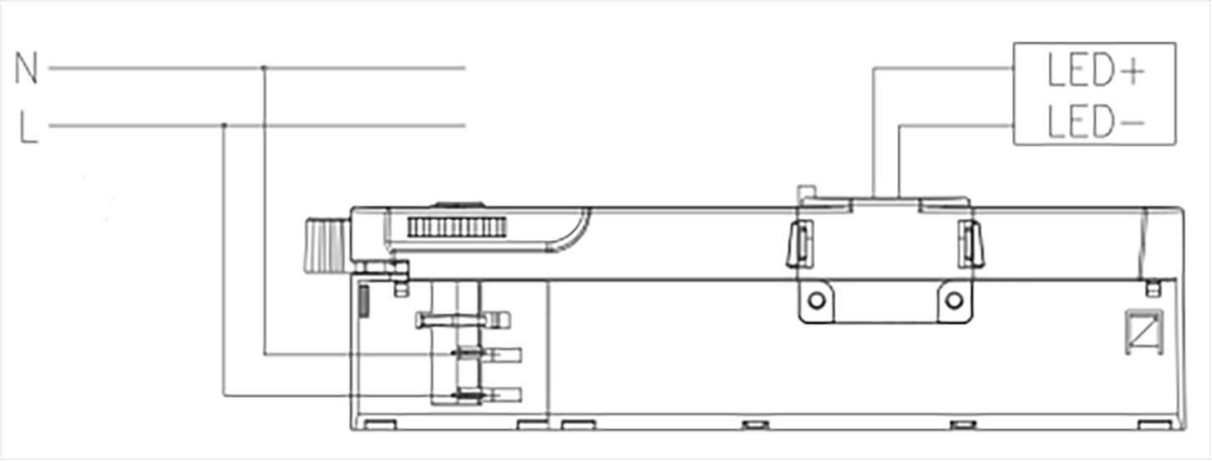

10. Packing information

Packing way	Model	Color	Carton L*W*H (mm)	Pcs/ Carton	Net weight/ Pcs(kg)	Net weight/ Carton(kg)	Gross weight / Carton(kg)
Industrial	SC42W300-1050CG4-W-TRIAC-NX	White	515*275 *370	150	0.125	18.75	20.07
	SC42W300-1050CG4-B-TRIAC-NX	Black					
	SC42W300-1050CG4-G-TRIAC-NX	Grey					

11. Ordering data

Model No	Item code
SC42W300-1050CG4-W-TRIAC-NX	156940
SC42W300-1050CG4-B-TRIAC-NX	156950
SC42W300-1050CG4-G-TRIAC-NX	156960
NIP M10x1x8 B G2	142261
NIP M10x1x8 G G2	142271
NIP M10x1x8 W G2	142281
NIP M10x1x12 B G2	142211
NIP M10x1x12 G G2	142221
NIP M10x1x12 W G2	142231

12. Lamp Screw Type

- Optional threaded sleeve for luminaire mounting
- Suitable for M10x1x8 threaded nut
- Additional mounting equipment,e.g.M10x1x12
- Gray,black,white
- further on request

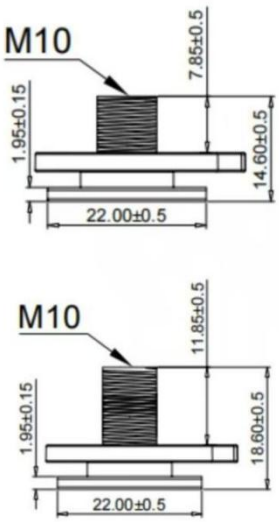

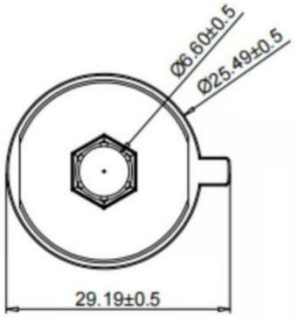

KGP Electronics GmbH
Hueckstraße 19
DE-58511Lüdenscheid

13. Suitable for following tracks

Serial number	Brand	Track model	System
1	Global	XTS11 & XTSC611	3P
2	A.A.G STUCCHL	9000A-2-ST	3P
3	Eutrac	25-106	3P
4	PowerGEAR	Pro-0431L&Pro-D631R	3P
5	ERCO	1079301000	3P

Remark:

1. The model name is XTS11 and XTSC611 tracks, and its brand is Global.
2. The model name used is the 9000A-2-ST track, and its brand is A.A.G STUCCHI.
3. The model name is 25-106 tracks, and its brand is Eutrac.
4. The model name is Pro-0431L tracks, and its brand is PowerGEAR.
5. The model name is 1079301000 tracks, and its brand is ERCO.

KGP does not guarantee the compatibility of the tracks and the track-adapter, because Manufacturing tolerances of the tracks or changes made at the tracks by the manufacturer could affect the compatibility between the tracks and the adapter.

14. Phase track light rail specification:

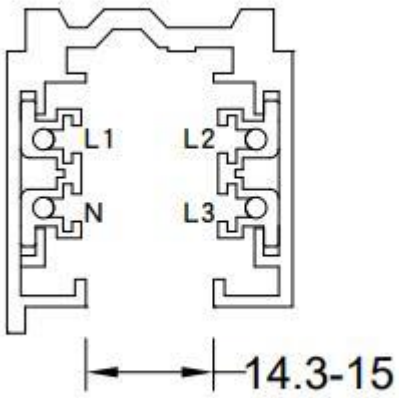

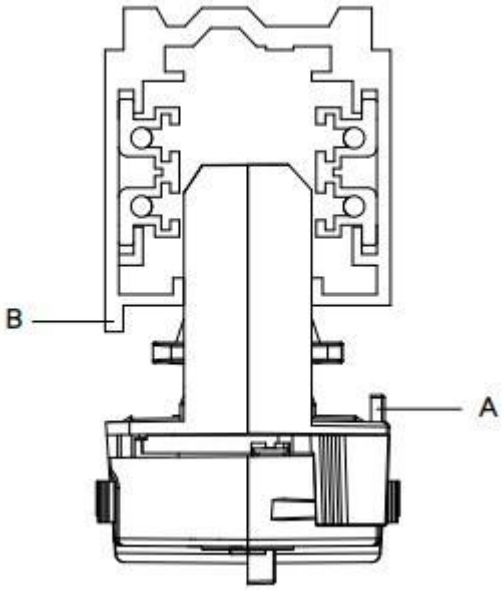

15. Lighting track adapter and rail system installation diagram:

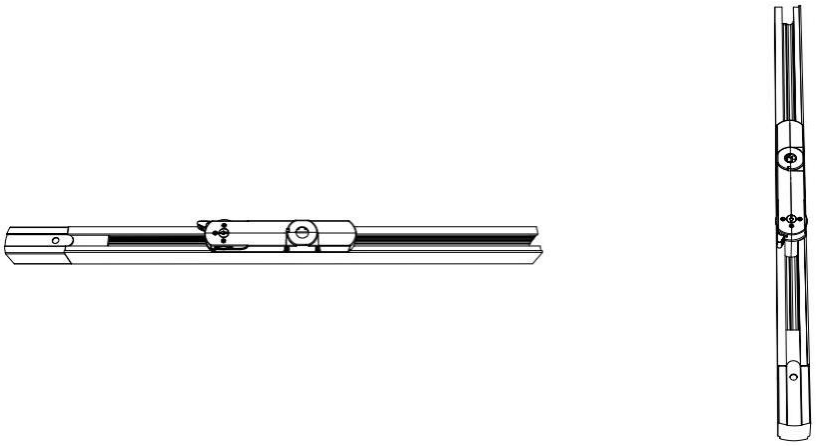

The adaptor shall be given that the use is limited to the track system specified.

16. Wiring instructions

- All connections must be kept as short as possible to ensure good EMI behaviour
- Mains leads should be kept apart from LED Driver and other leads (ideally 5 – 10 cm distance)
- Advice the maximum length of output wires is 3 m
- Secondary switching is not permitted（Except for constant voltage）
- Incorrect wiring can damage LED modules.
- The wiring must be protected against short circuits to earth (sharp edged metals parts, metal cable clips, louver, etc.)
- Hot plug-in is not supported due to residual output voltage of > 0 V up to mains voltage. Danger to life.
- When connecting an LED load, restart the device to activate the LED output.

17. Replace LED module

- Mains oft
- Remove LED module
- Walt for 30 seconds
- Connect LED module again
- Hot plug-in or secondary switching of LEDs is not permitled and may cause a very high current to the LEDs

18. Revision history

Date	Revision	Remark
2026.16.03	V0.01	Product release

KGP Electronics GmbH
Hueckstraße 19
DE-58511Lüdenscheid