NEXIVO
by KGP Electronics GmbH

SC42W700-1050CG4-X-HE-NX

Constant Current Driver

Model:SC42W700-1050CG4-W-HE-NX
SC42W700-1050CG4-B-HE-NX
SC42W700-1050CG4-G-HE-NX

Model	Item Code	Output current	Input current	Input power	Output power range	PF	Efficiency	Output voltage	No load voltage
SC42W700-1050 CG4-W-HE-NX SC42W700-1050 CG4-B-HE-NX SC42W700-1050 CG4-G-HE-NX	159300 162480 162490	700mA	0.17A	29.8W	17.50-28.00W	0.90-0.94	94.0%	25-40V	59V Max.
		750mA	0.18A	32.0W	18.75-30.00W	0.91-0.94	94.0%		
		800mA	0.19A	34.0W	20.00-32.00W	0.92-0.95	94.0%		
		850mA	0.20A	36.2W	21.25-34.00W	0.93-0.95	94.0%		
		900mA	0.20A	38.3W	22.50-36.00W	0.93-0.95	94.0%		
		950mA	0.21A	40.4W	23.75-38.00W	0.94-0.96	94.0%		
		1000mA	0.22A	42.6W	25.00-40.00W	0.94-0.96	94.0%		
		1050mA	0.23A	44.7W	26.25-42.00W	0.94-0.96	94.0%		

*** Test result @230V, 50Hz, Full Load.**

1. Parameters

Category	Item	Technical Norm
Features	Output Type	Constant Current
	Output Features	Isolation
	IP Grade	IP20
	Insulation Class	Class II(compatible Class I)
Input	Rated Input Voltage	220-240VAC
	Range of Input Voltage	198-264VAC
	Frequency	50/60Hz
	Overvoltage protection	N/A
	Input Current	≤0.23A （230VAC, full load)
	Input Power	≤44.7W （230VAC, full load)
	Power Factor	≥0.96 （230VAC, full load)
	THD	≤20% (230VAC，full load)
	No-load Power Consumption	≤0.50W @230VAC
	Inrush Current	≤15.4A/28.8us (230VAC，full load)

KGP Electronics GmbH
Hueckstraße 19
DE-58511Lüdenscheid

	Connected quantity of 10A Breaker Connected quantity of 13A Breaker Connected quantity of 16A Breaker Connected quantity of 20A Breaker	12pcs/type A ;20pcs/type B ;32pcs/type C 16pcs/type A ;26pcs/type B ;42pcs/type C 19pcs/type A ;31pcs/type B ;51pcs/type C 25pcs/type A ;40pcs/type B ;64pcs/type C
Output	Output Voltage Range	25-40VDC@700-1050mA
	No Load Voltage	59VDC Max.
	Output Current	700mA - 1050mA (Max. output), Factory set current of 700mA
	Max. Output Power	42W
	Efficiency	≥94%　230VAC，full load
	Output LF current ripple (< 120 Hz)	±3% (Imax-Imin) / (Imax+Imin)
	Current Accuracy	±5%
	PSTLM	≤1
	SVM	≤0.4
	Starting Delay Time	≤0.5S　(230VAC，full load)
Protection	Short Circuit Protection	Auto Recovery
	Overload Protection	Auto Recovery (not be hot swap)
	No-load Protection	Auto Recovery
	Insulation voltage	3000V 5mA 60S between P-S
	Insulation resistance	>100M ohm @ 500VDC
	Leakage current	< 700μA, I/P to O/P @230V input
Environment	Ta/Operation Temperature	-25….+35℃
	Ts/Storage Temperature	-25….+75℃
	Tc/Enclosure Temperature	75℃
	Humidity	10%.... 90%RH
	Atmosphere	86-108KPa
Construction	Connection Method	Push-in Terminal
	Installation	Independent
	SEC Wire preparation	0.5-1.5□
	SEC Wire preparation	0-0.8±0.05m (The EMC test results were achieved at approximately 0.8 meters) (the length required by the standard). If there are any data differences, please test according to the length required by the standard)
	Dimension	148.2*31.1*42.3mm (L*W*H)
Standards	Certification	CE
	Safety Standards	EN61347-1:2015/A1:2021; EN61347-2-13:2014/A1:2017;
	Performance	EN62384
	Surge	L-N:1kV
Others	RoHS	compliedto2011/65/EU
	Life Time	50000h　Tc=75℃
		75000h　Tc=70℃
		100000h　Tc=65℃
	Warranty	5years ，　F.R. < 10000ppm

Remark:
1.All Parameters,if not specified,are measured at 230VAC/50Hz and 25℃ ambient temperature.
2.LED Driver is a component of the luminaires. Luminaires and wire layout will affect the EMC, please check the EMC with end products again.

Distance	15m	30m	50m
Cable selection	0.5mm²	0.75mm²	1.0mm²

2. Output current setting

Output Current	1	2	3
700mA	-	-	-
750mA	-	-	ON
800mA	-	ON	-
850mA	-	ON	ON
900mA	ON	-	-
950mA	ON	-	ON
1000mA	ON	ON	-
1050mA	ON	ON	ON

3. Label

White (RAL 9016)

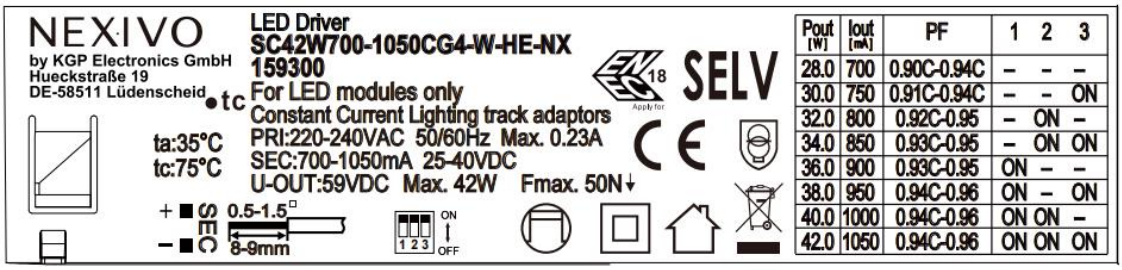

Black (RAL 9005)

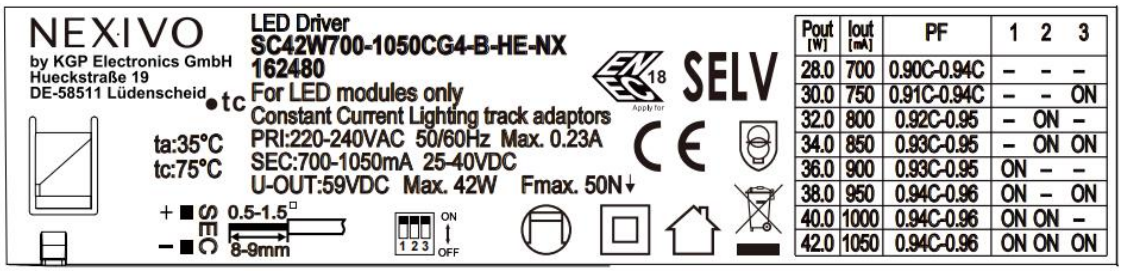

Grey (RAL 7035)

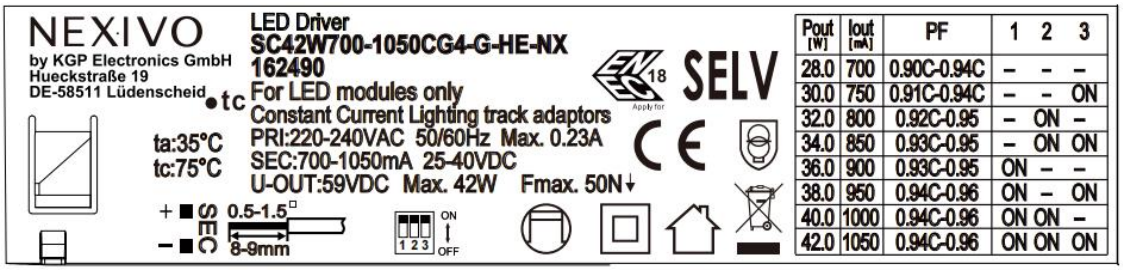

Pout [W]	Iout [mA]	PF	1	2	3
28.0	700	0.90C-0.94C	–	–	–
30.0	750	0.91C-0.94C	–	–	ON
32.0	800	0.92C-0.95	–	ON	–
34.0	850	0.93C-0.95	–	ON	ON
36.0	900	0.93C-0.95	ON	–	–
38.0	950	0.94C-0.96	ON	–	ON
40.0	1000	0.94C-0.96	ON	ON	–
42.0	1050	0.94C-0.96	ON	ON	ON

4. Dimension（Unit：mm）

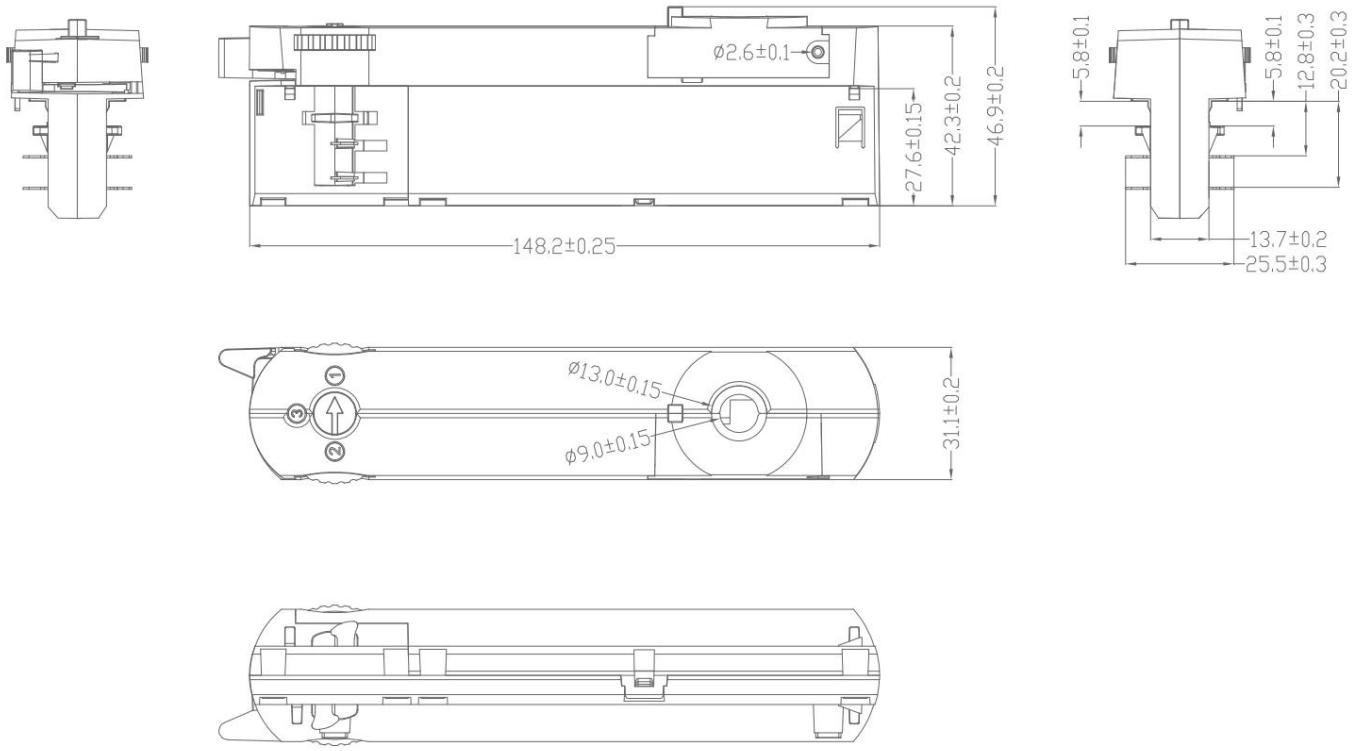

5. Wiring Diagram

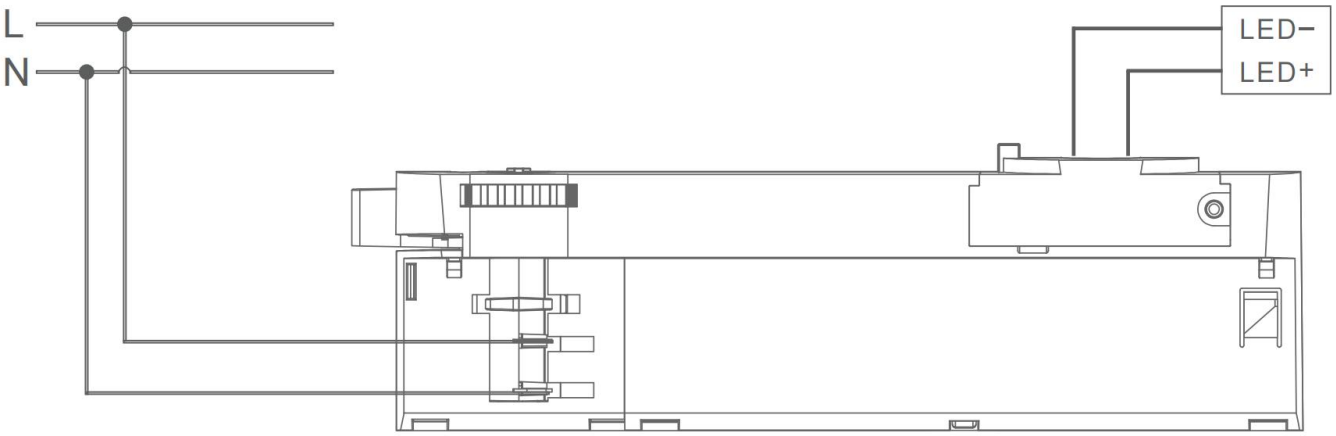

6. Packing information

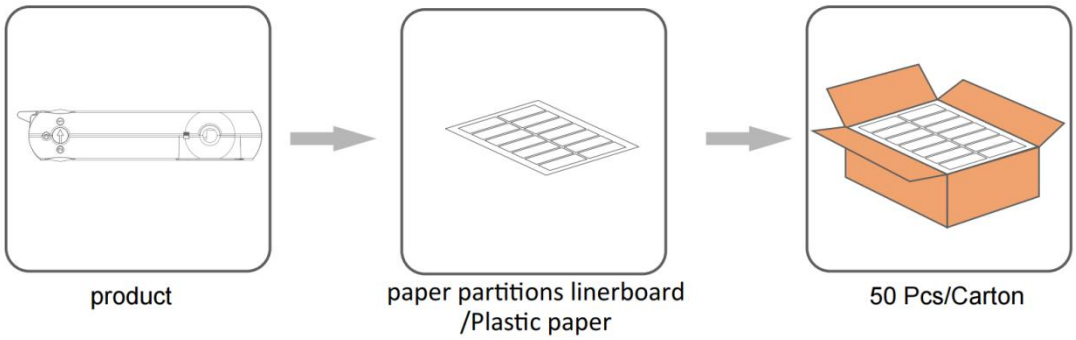

Carton L*W*H(mm)	Pcs/Carton	Net weight/ Pcs(kg)	Net weight/ Carton(kg)	Gross weight / Carton(kg)
T.B.D	T.B.D	T.B.D	T.B.D	T.B.D

7. Ordering Data

Model No	Item code
SC42W700-1050CG4-W-HE-NX	159300
SC42W700-1050CG4-B-HE-NX	162480
SC42W700-1050CG4-G-HE-NX	162490

KGP Electronics GmbH
Hueckstraße 19
DE-58511Lüdenscheid

8. Lamp Screw Type

- Optional threaded sleeve for luminaire mounting
- Suitable for M10x1x8 threaded nut
- Additional mounting equipment,e.g.M10x1x12
- aluminium, black, white
- further on request

Ordering data

Type	Colour	Qty/ctn	Weight/pcs
M10X1X8	White	2500	9.6g
	Black	2500	9.6g
	Grey	2500	9.6g
M10X1X12	White	2500	10.0g
	Black	2500	10.0g
	Grey	2500	10.0g

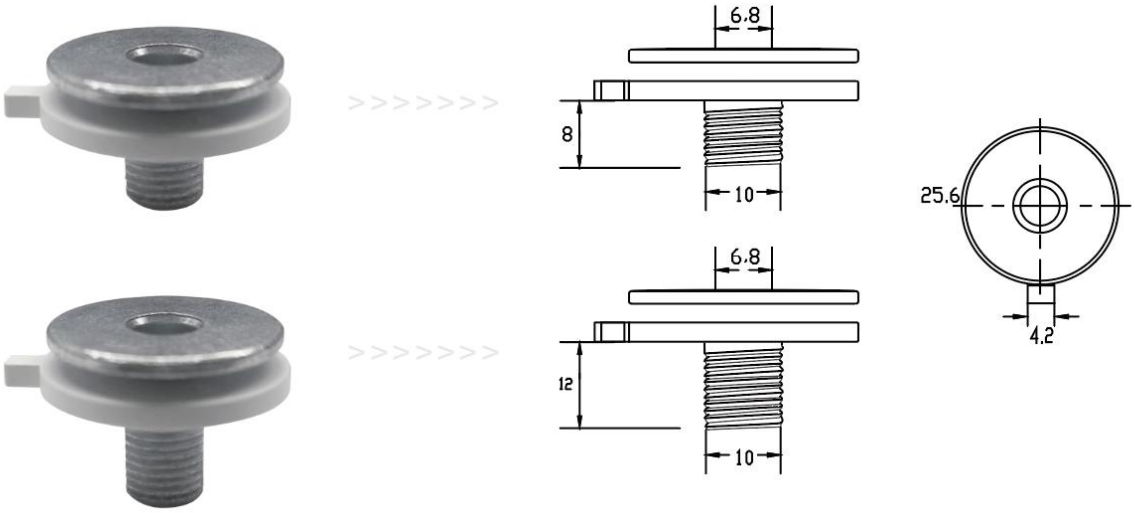

KGP Electronics GmbH
Hueckstraße 19
DE-58511Lüdenscheid

9. Electrical values

1. Operating power windows

10. Suitable for following tracks

Serial number	Brand	Track model	Serial number
1	Global	XTS 4&XTSF 4	3P
2	Stucchi	9000XX Series	3P
3	Eutrac	2510x	3P
4	Unipro	T32B	3P
5	Lvela	7501	3P

Remark:

1.The model name is XTS 4 and XTSF 4 tracks, and its brand is Global.

2.The model name used is the 9000XX track,and its brand is Stucchi.The“XX in the model name represents: it represents a different color.

3. The model name is 2510x tracks, and its brand is Eutrac.The“x”in the model name represents: it represents a different color(x=1white;x=2 black;x=3silverx=8 grey).

4. The model name is T32B tracksand its brand is Unipro.

5. The model name is 7501 tracks, and its brand is Ivela.

11. Phase track light rail specification:

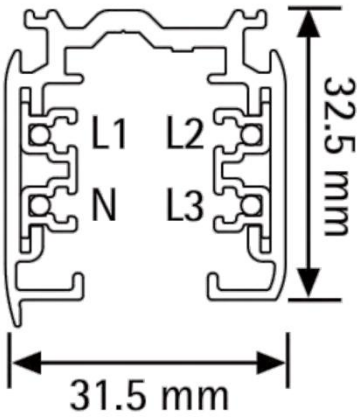

12. Lighting track adapter and rail system installation diagram:

The adaptor shall be given that the use is limited to the track system specified.

13. Wiring instructions

- All connections must be kept as short as possible to ensure good EMI behaviour
- Mains leads should be kept apart from LED Driver and other leads (ideally 5 – 10 cm distance)
- Advice the maximum length of output wires is 3 m
- Secondary switching is not permitted（Except for constant voltage）
- Incorrect wiring can damage LED modules.
- The wiring must be protected against short circuits to earth (sharp edged metals parts, metal cable clips, louver, etc.)

14. REVISION HISTORY

Date	Revision	Remark
2026.08.05	V0.01	Product release

KGP Electronics GmbH
Hueckstraße 19
DE-58511Lüdenscheid